Battery Input

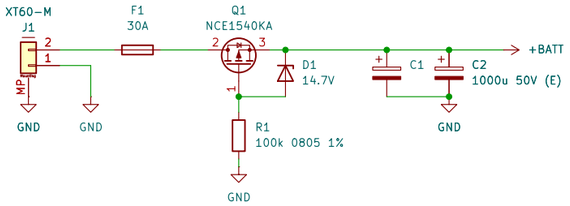

22.2V to 12V

External DC/DC Converter

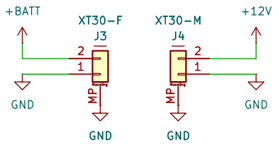

22.2V to 7.5V

External DC/DC Converter

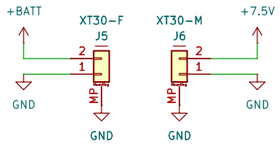

12V to 5.1V

Adjustable buck converter.
Change until Raspberry Pi 5V pin is exactly 5.1V

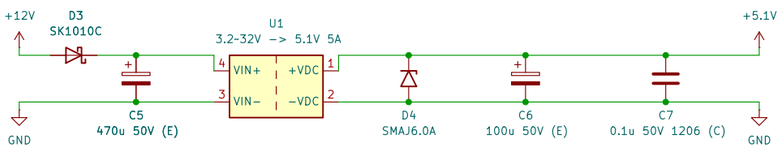

Status LEDs

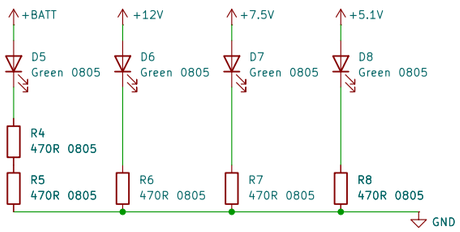

Raspberry Pi

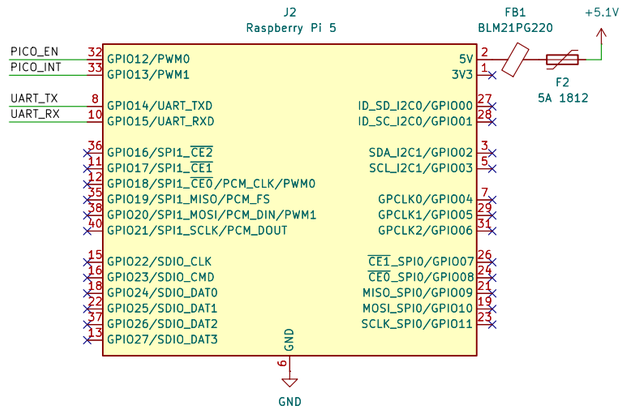

Warning: No back-power protection.
Use an isolator if connecting directly to Pi with USB. Remote PC preferred.

Raspberry Pi Pico 2

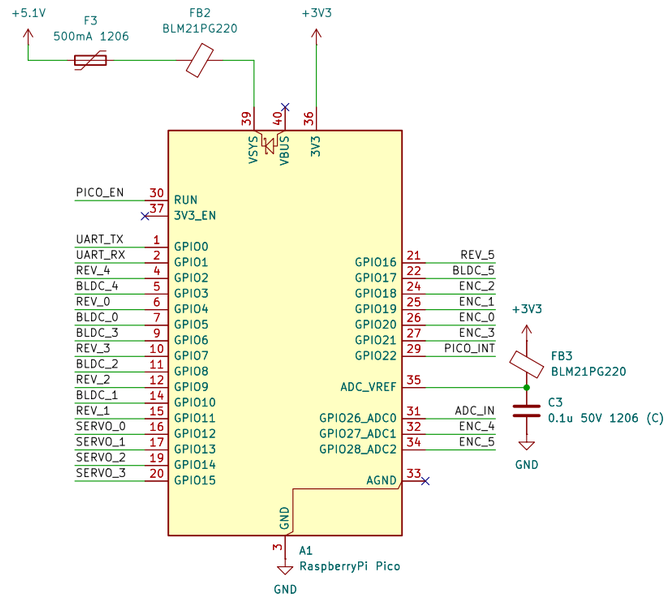

Battery Monitor

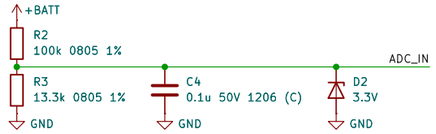

Servo Motors

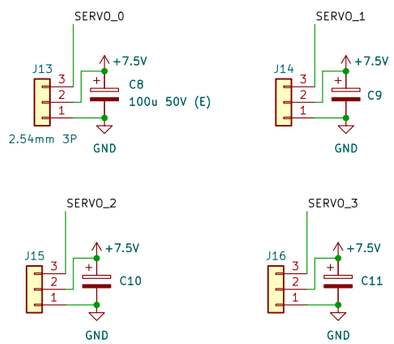

Mounting

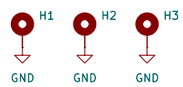

DC Motors

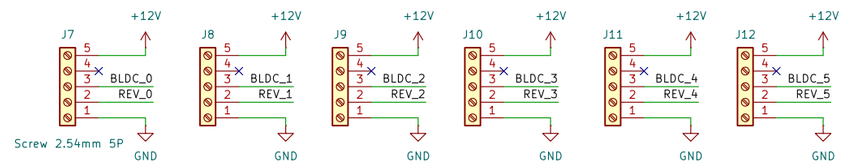

DC Motor Encoders

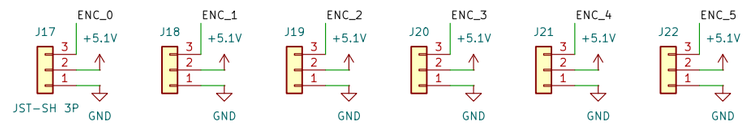

Designed by: Ilo Japar
HKU ROVER Team
Sheet: /
File: PCB v0.2.kicad_sch

Title: Prototype Rover PCB v0.1

Size: A3	Date: 2026-04-06	**Rev: A**
KiCad E.D.A. 10.0.0		Id: 1/1

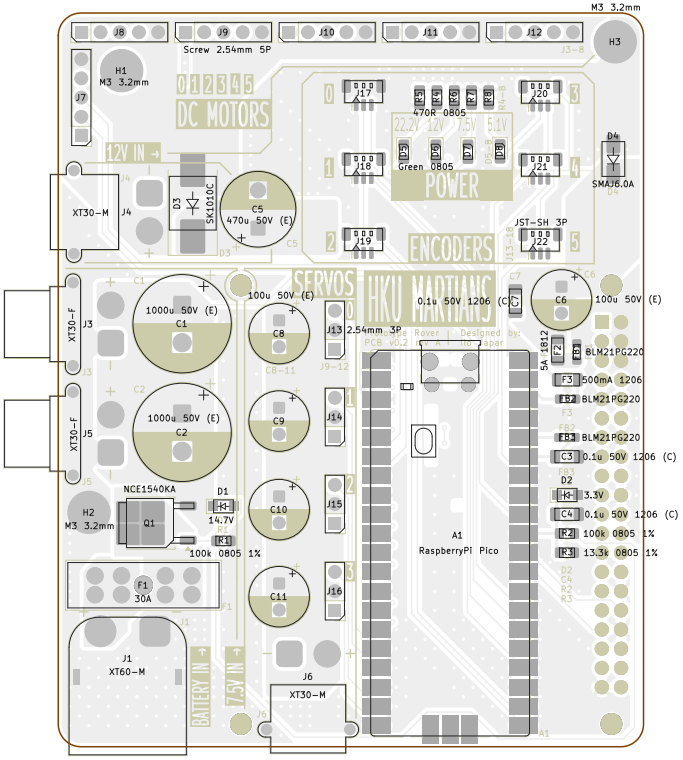

Board2Pdf: Light Colors Placement TOP – Page 1/2

Designed by: Ilo Japar
HKU ROVER Team

Sheet: Light Colors Placement TOP
File: PCB v0.2.kicad_pcb

Title: Prototype Rover PCB v0.1

Size: A4	Date: 2026-04-10	**Rev: A**
KiCad E.D.A. 10.0.0		Id: /1

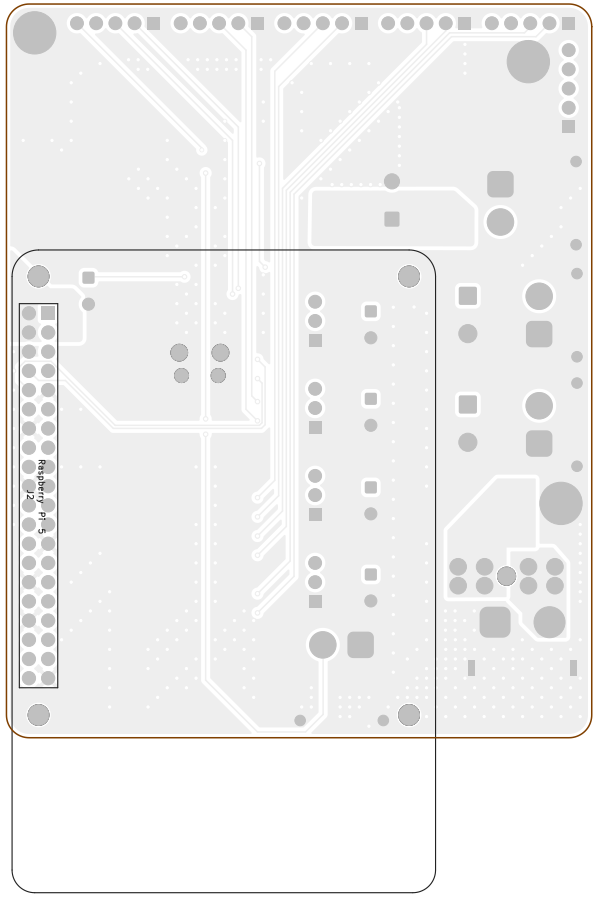

Board2Pdf: Light Colors Placement BOT – Page 2/2

Designed by: Ilo Japar
HKU ROVER Team

Sheet: Light Colors Placement BOT
File: PCB v0.2.kicad_pcb

Title: Prototype Rover PCB v0.1

Size: A4	Date: 2026-04-10	**Rev: A**
KiCad E.D.A. 10.0.0		Id: /1

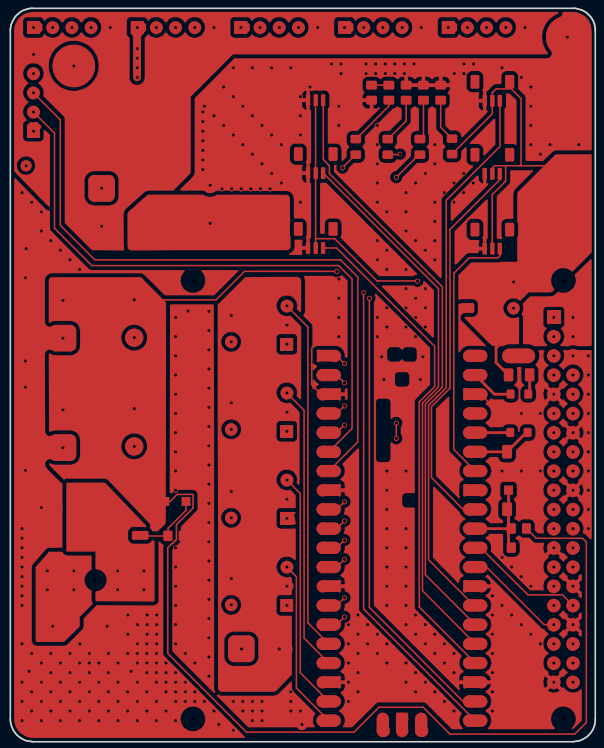

Designed by: Ilo Japar
HKU ROVER Team

Sheet:
File: PCB v0.2.kicad_pcb

Title: Prototype Rover PCB v0.1

Size: A4	Date: 2026-04-10	**Rev: A**
KiCad E.D.A. 10.0.0		Id: 1/1

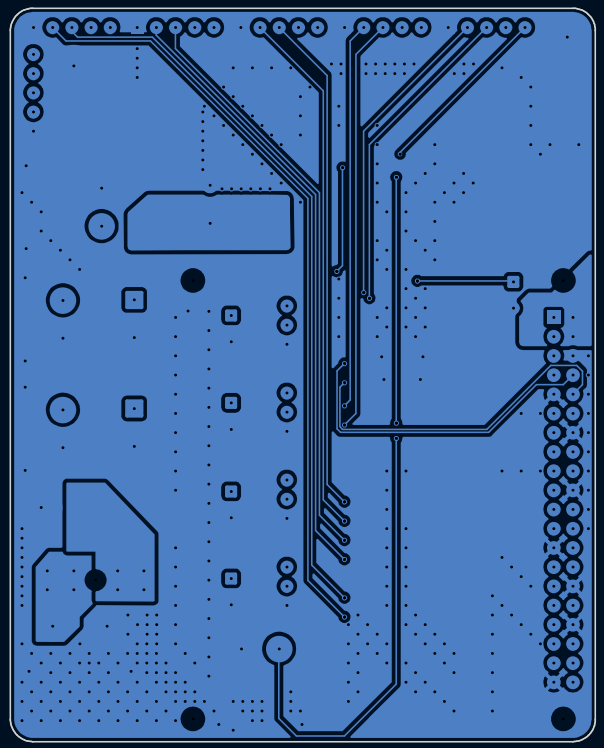

Designed by: Ilo Japar
HKU ROVER Team

Sheet:
File: PCB v0.2.kicad_pcb

Title: Prototype Rover PCB v0.1

Size: A4	Date: 2026-04-10	**Rev: A**
KiCad E.D.A. 10.0.0		Id: 1/1

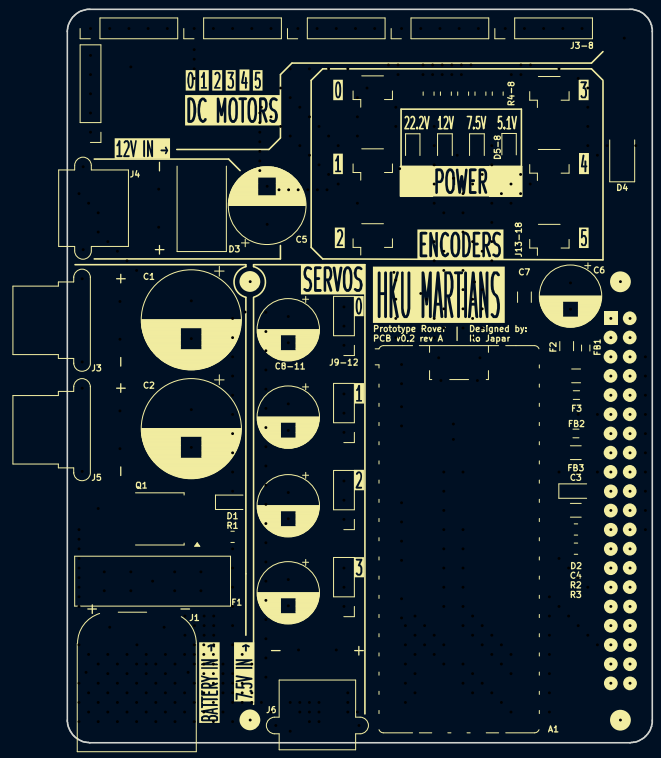

Designed by: Ilo Japar
HKU ROVER Team

Sheet:
File: PCB v0.2.kicad_pcb

Title: Prototype Rover PCB v0.1

Size: A4	Date: 2026-04-10	**Rev: A**
KiCad E.D.A. 10.0.0		Id: 1/1

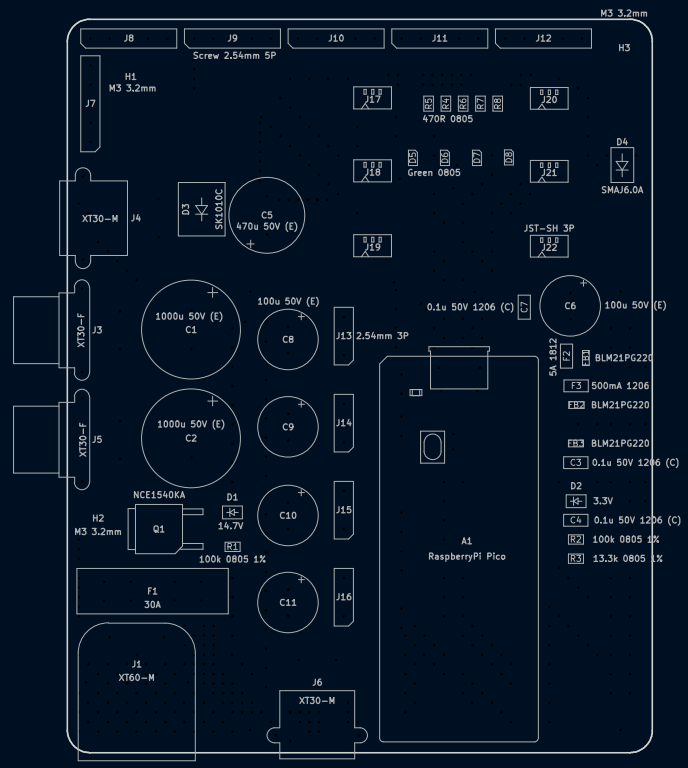

Designed by: Ilo Japar
HKU ROVER Team

Sheet:
File: PCB v0.2.kicad_pcb

Title: Prototype Rover PCB v0.1

Size: A4	Date: 2026-04-10	**Rev: A**
KiCad E.D.A. 10.0.0		Id: 1/1